Roll & Hill

32 33rd Street, Unit 10, Brooklyn, NY 11232
T +1 718 387 6132 F +1 718 387 6104
www.rollandhill.com

CONTENTS

Castle 18

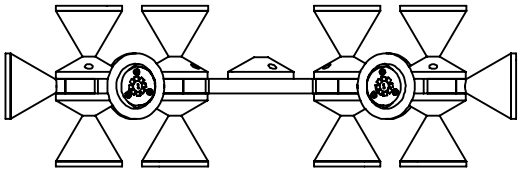

Glass Diffuser X 6

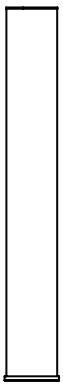

Stem and 1/8 IPS Threaded Rod w/ Hangstraight

Glass Diffuser x 12

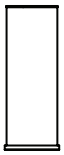

Canopy

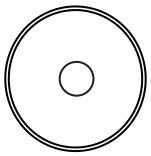

Crossbar/Driver Assembly

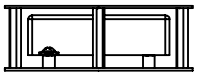

8-32 J-Box Screws

SAFETY INFORMATION

Only suitable for direct mounting on non-combustible surfaces.
Under no circumstances can Castle Chandeliers be mounted on normally flammable surfaces.
Suitable for dry, indoor use only.
Maximum ambient temperatures: 25° C

Roll & Hill

32 33rd Street, Unit 10, Brooklyn, NY 11232
T +1 718 387 6132 F +1 718 387 6104
www.rollandhill.com

CASTLE CHANDELIER | CEILING INSTALLATION

Note: Please contact a licensed electrician.

1. To customize the length of the provided 36-inch stem, you may cut to desired length. Then cut the inner all-thread tube to the same length plus 1/2 inch to allow room for threading.

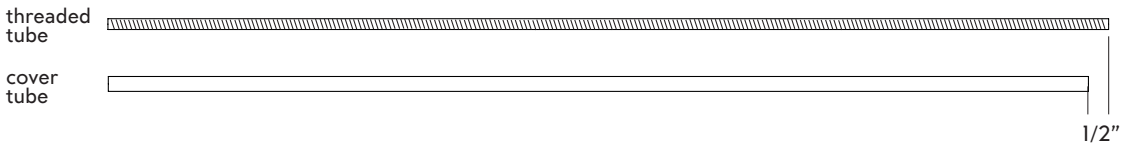

2. Feed wire from the fixture through the threaded rod. Thread the rod a quarter inch into the top hub of the fixture.

3. Slide the cover tube (B) over the threaded tube.

4. Secure the crossbar (A) to the junction box with the 8/32 J-Box screws as shown.

5. Make all final electrical connections between the mains power and the LED driver.

6. Raise driver plate (C) with hangstraight, threaded rod and fixture all connected to the standoffs protruding from the crossbar (A) and secure with screws provided.

7. Raise canopy to the ceiling line and tighten in place with threaded ring (D)

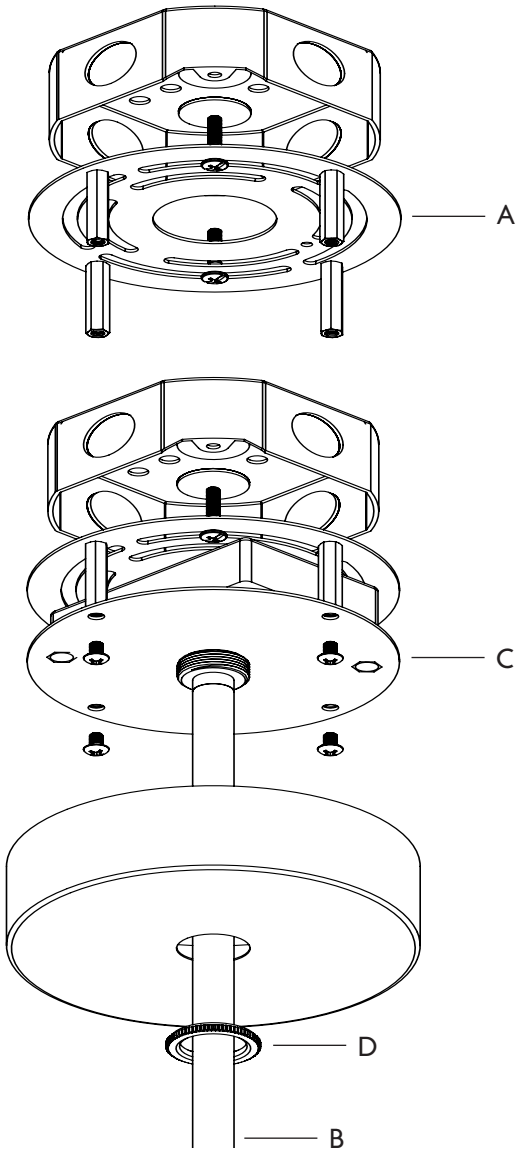

Roll & Hill

32 33rd Street, Unit 10, Brooklyn, NY 11232
T +1 718 387 6132 F +1 718 387 6104
www.rollandhill.com

CASTLE CHANDELIER | BULB AND DIFFUSER INSTALLATION
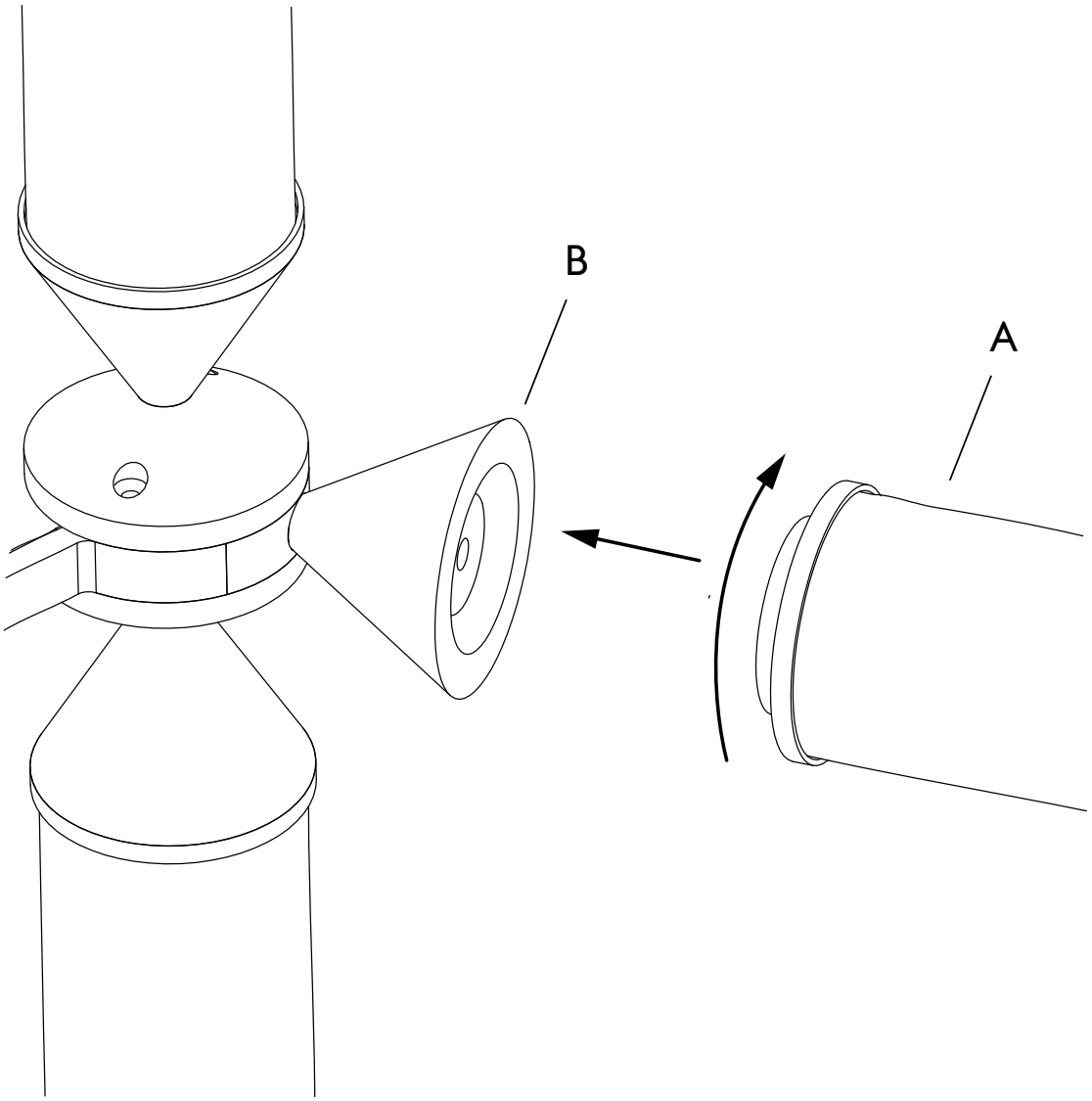
1. Screw the glass diffusers (A) clockwise into threaded hub (B)